SCHERTZ 6 Drawers Tallboy

Code:22259

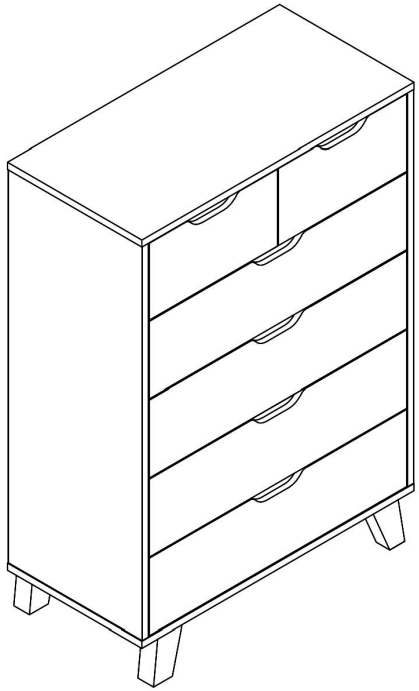

Assembly Instrustions

Thank you for your purchase.
please follow the instructions below for correct assembly.

- Quicker assembly, we recommend the use of a power drill on a low-speed setting
- We strongly recommend that the product is assmbled on a flat and smooth surface and keep on the same horizontal line,otherwise,there will be a phenomenon of screw dislocation and cannot be installed
- Someparts of the wooden product can’t be washed and wiped if it is made by original wood and without painting.

WARNING: Any furniture that is not anchored to a wall has the potential to tip over in certain circumstances, i.e. if a child attempts to climb up on the furniture or in the event of an earthquake. Accordingly, we recommend that all furniture is anchored to a wall. We supply a ree safety wall anchor with all furniture sold and we recommend these are used to prevent your product tipping. See our blog here or more info on using wall anchors.

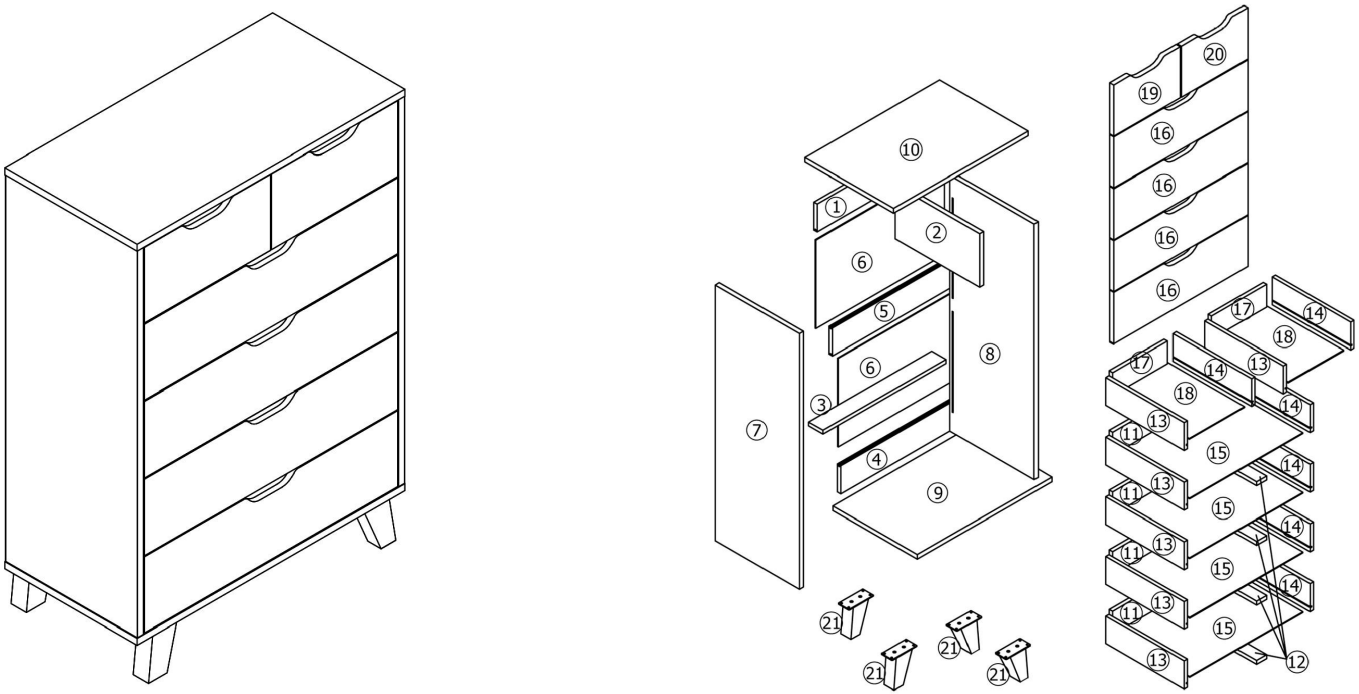

A 57set Φ15x12mm	B 57set 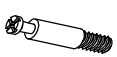 Φ7x35mm	C 10set 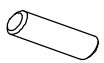 Φ8x30mm	D 33set Φ4x40mm	E 16set Φ4x16mm	F 48set Φ3.5x14mm	G 6set 14"
H 30set Φ20mm	I Φ43x20mm	Φ4x16mm	Φ7.8x38mm	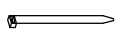 300mm	Φ4x40mm	1set

Φ: it means the diameter of the product; e.g. Φ6 means 6mm diameter.

1

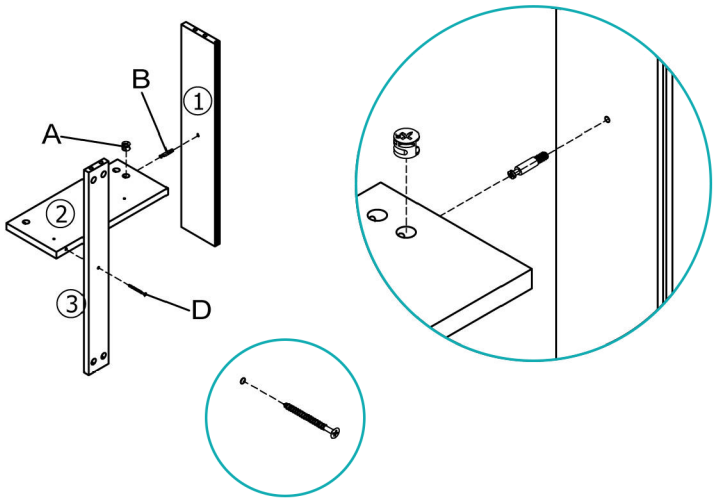

Ax1pcs Bx1pcs Dx1pcs

2

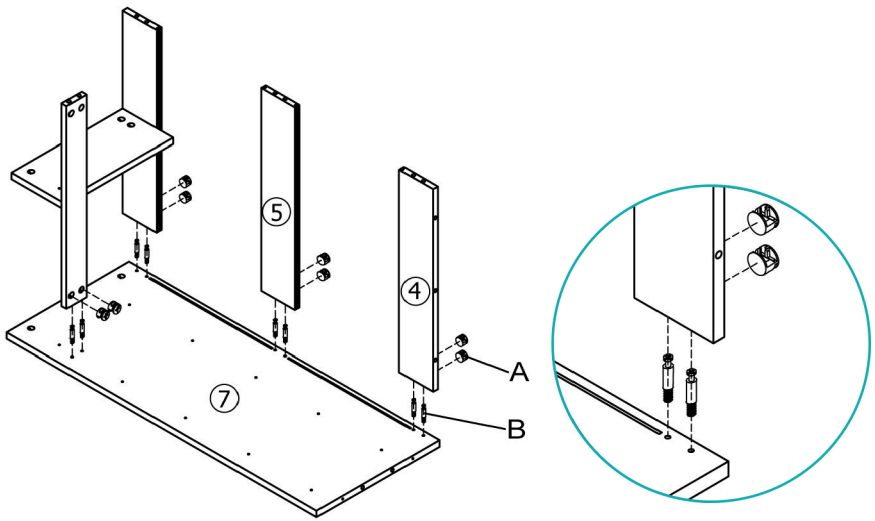

Ax8pcs Bx8pcs

3

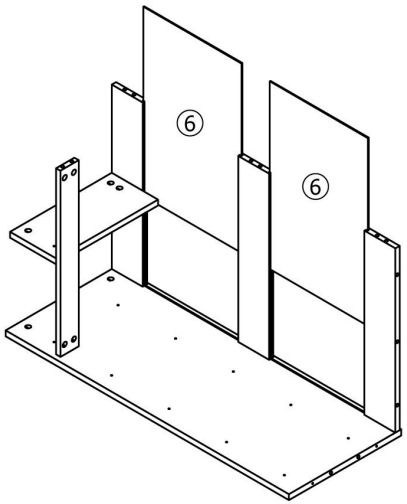

Ax6pcs Bx6pcs

4

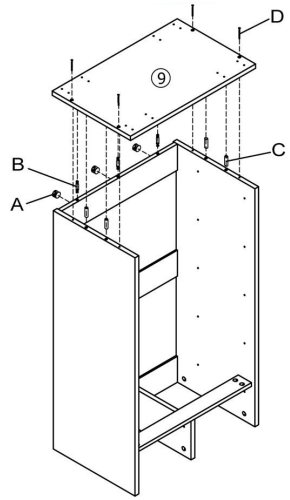

Ax3pcs Bx3pcs Cx4pcs Dx4pcs

5

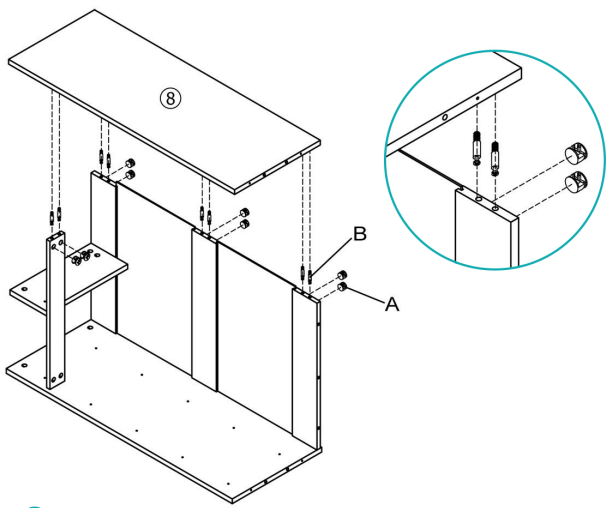

Ax8pcs Bx8pcs

6

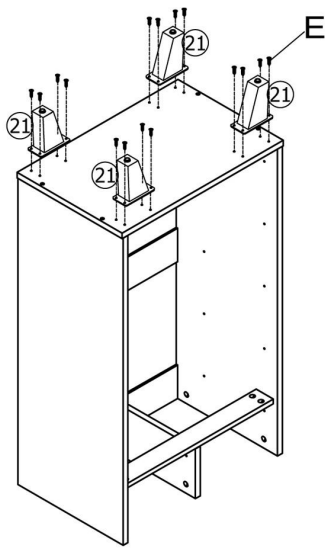

Ex16pcs

7

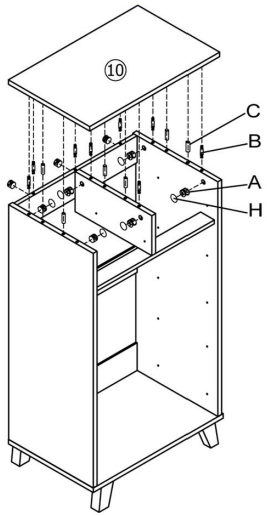

Ax9pcs Bx9pcs Cx6pcs Hx6pcs

8

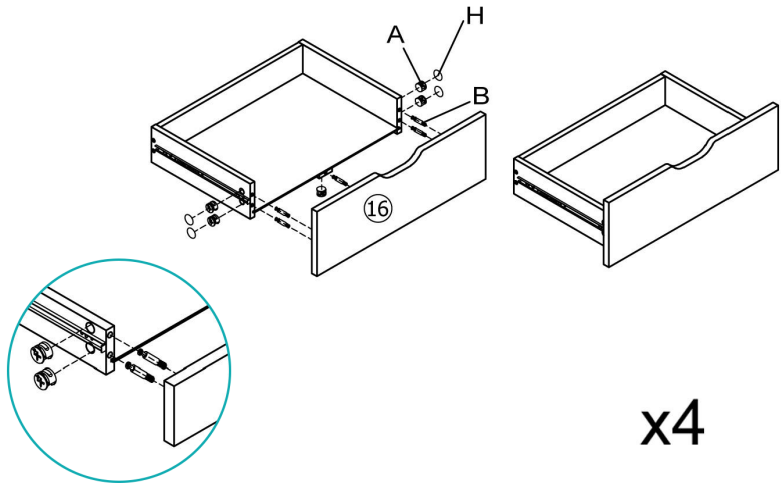

Ax20pcs Bx20pcs Hx16pcs

9

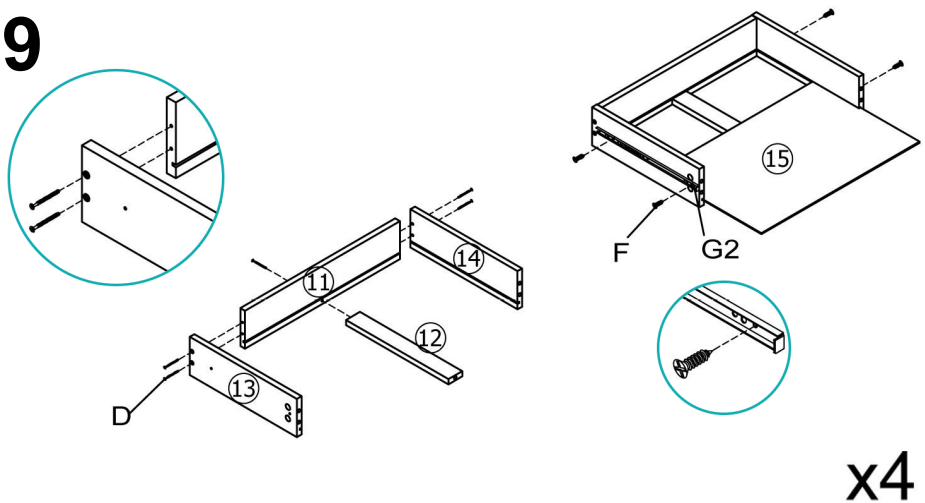

Dx20pcs Fx16pcs G2x8pcs

10

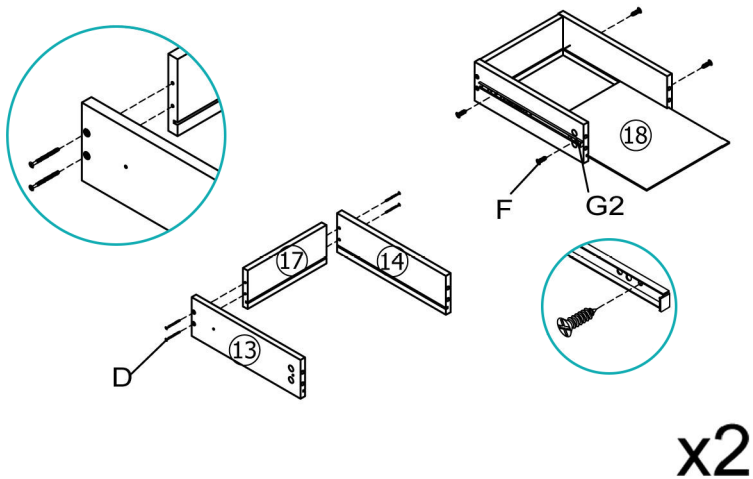

Dx8pcs Fx8pcs G2x4pcs

11

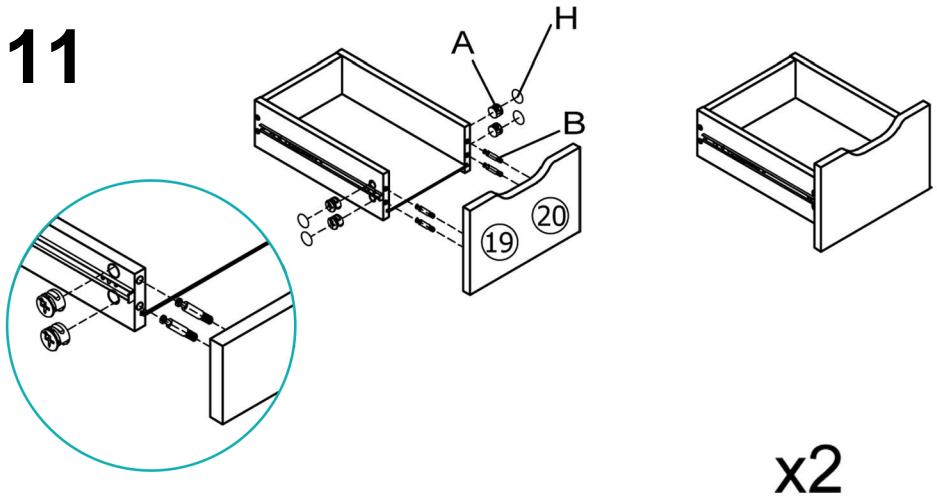

Ax8pcs Bx8pcs Hx8pcs

12

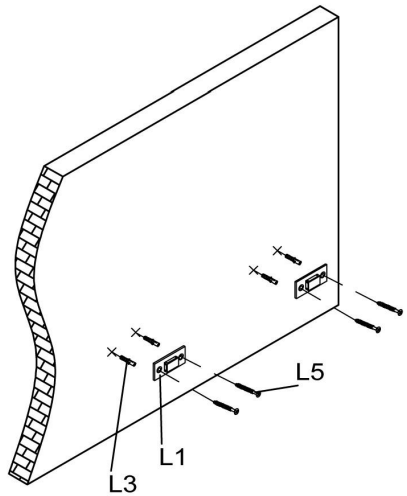

L1x2pcs L3x4pcs L5x4pcs

13

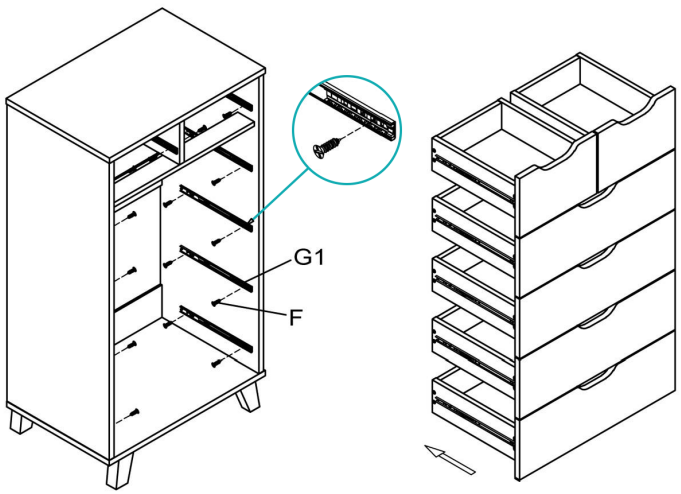

Fx24pcs G1x12pcs

14

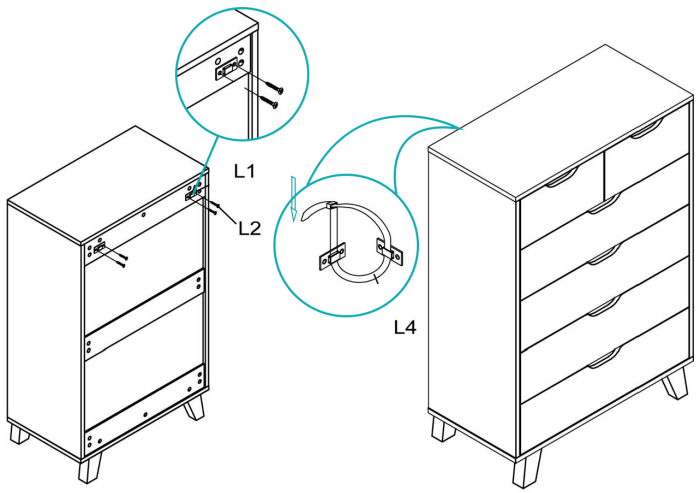

L1x2pcs L2x4pcs L4x2pcs

SURFACE CARE INSTRUCTIONS

A little care and attention will extend the life and good looks of your furniture. Take care when using materials which might spill, or be sharp or abrasive, on the surface of your furniture.

Normal Cleaning: For normal cleaning use a soft, dry, clean cloth.

Glass Cleaning for Frosted Glass:Do not use glass cleaner or solvent based cleaners on glass that has a frosting effect on it.

Normal Glass Cleaning:You may use normal glass cleaning products on all other types of glass. Use a soft non-abrasive cloth to remove light dust and finger prints.

Leather&Vinyl Cloth Cleaning: Under no circumstances should any abrasive materials be used on these surfaces, as it will result in irreparable damage.

Do not use solvents, solvent based cleaners, scouring pads, steel wool or scrubbing brushes to clean this furniture item.

Only use a slightly damp, soft, clean cloth on this surface if cleaning is needed. Do not scrub.

CAUTION

- 1.When moving this furniture item, please always hold up the product. Dragging or sliding could damage the product itself and the floor surface.
- 2.As with all furniture, this unit should not be exposed to direct sunlight, extreme temperatures or moisture, as this can result in irreparable damage.
- 3.Be sure to protect the floor, wall or surrounding furniture with a carpet, blanket or shock-absorbing materials during assembly in order not to damage them.